PLANTER INSPECTION CHECKLIST

Take a look inside for genuine John Deere parts to ensure maximum performance this planting season.

JOHN DEERE

What are worn planter parts costing you? – Don't risk it!

PRIMARY AGRONOMIC FACTORS AFFECTED BY PLANTING THAT IMPACT YIELD			
Correct population	Uniform spacing	Uniform emergence	Planting window
PERFORMANCE DRIVERS OF EACH OF THE ABOVE AGRONOMIC THEMES			
Population Vacuum level Skips/multiples Double eliminator settings	Singulation Ride quality	Depth Seed to soil contact Residue mgnt.	Planting days

Do you think that your planter can make it one more season without inspection? You might be surprised just how much worn parts can impact your bottom line.

Correct population, uniform spacing, and emergence can impact yield potential. Some of the most commonly replaced meter wear parts that can negatively impact your planter's ability to deliver the correct population, or uniform spacing within a vacuum meter include knockout wheels, seed meter brushes, and vacuum meter seals.

Turning potential into profit sounds simple enough on paper. But in the field, your pre-season plan does not always go according to script. That is why you need the kind of planting equipment that can perform as expected, but also adapt to whatever conditions are thrown its way. Equipment that is cutting-edge to help you push past traditional norms on your way to higher yields. Well, the full suite of new John Deere planting equipment does just that – all so you can maximise the true potential of your operation.

TABLE OF CONTENTS

PLANTERS COVERED BY THIS INSPECTION CHECKLIST

1750 Planter Dry and Liquid Fertiliser (MaxEmerge Plus, XP) 2
1755 Planter Dry and Liquid Fertiliser (MaxEmerge5 Plus, XP) 2
1720 - 1770NT Series Planter (MaxEmerge Plus, XP Pro) 3
FX Series Planter (MaxEmerge Plus, XP Pro) 3
1725 - 1775NT Planter Dry and Liquid Fertiliser (MaxEmerge5 Plus, XP) 4

PLANTER ROW UNITS COVERED BY THIS INSPECTION CHECKLIST

MaxEmerge Plus Row Unit 5
MaxEmerge XP, XP Pro Row Units 5
MaxEmerge5 Row Unit 6
John Deere MaxEmerge5 series Row Units 6

MaxEmerge5 Meter Vacuum Dome 7
MaxEmerge5 Seed Knocker 7
MaxEmerge5 Gauge Wheel Arms 8
MaxEmerge5 Tru-Vee Opener 9
MaxEmerge5 Tru-Vee Opener Shank 10
General Fertiliser Opener 11
MaxEmerge5, XP, XP Pro Closing Wheel – Cast 11
MaxEmerge5, XP, XP Pro Closing Wheel – Rubber Tyre 12
MaxEmerge5 Seed Tube Guide 12
MaxEmerge5 Chain Sprocket – Chain Drive 13
MaxEmerge5, XP, XP Pro Gauge Wheel Narrow – Spoked 14
MaxEmerge5, XP, XP Pro Gauge Wheel – Regular 14
Seed Disc 15

John Deere Planter Inspection 16
Order List 21

PLANTERS COVERED BY THIS INSPECTION CHECKLIST

1750 Planter Dry and Liquid Fertiliser (MaxEmerge Plus, XP)

1720 - 1770NT Series Planter (MaxEmerge Plus, XP Pro)

1755 Planter Dry and Liquid Fertilizer (MaxEmerge5 Plus, XP)

FX Series Planter (MaxEmerge Plus, XP Pro)

PLANTER ROW UNITS COVERED BY THIS INSPECTION CHECKLIST

1725 - 1775NT Planter Dry and Liquid Fertiliser (MaxEmerge5 Plus, XP)

MaxEmerge Plus Row Unit

MaxEmerge XP, XP Pro Row Units

MaxEmerge5 Row Unit

John Deere MaxEmerge5 Series Row Units

MaxEmerge5 Meter Vacuum Dome

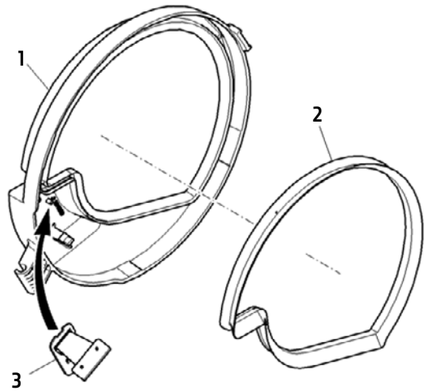

KEY	PART NO	PART DESCRIPTION	QTY USED PER ROW	ORDER LIST QTY	REMARKS
1	A94259	Chamber	1		Vacuum dome
2	A74191	Seal	1		
3	AA79993	Wiper blade	1		Use with A52391

MaxEmerge5 Seed knocker (Clip in type)

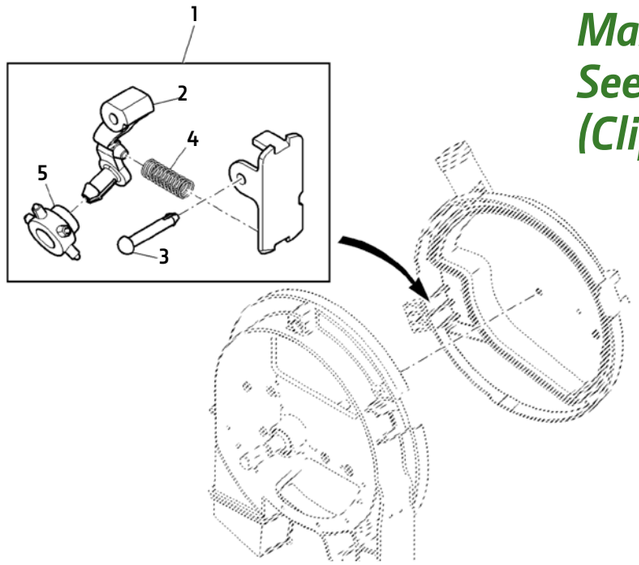

KEY	PART NO	PART DESCRIPTION	QTY USED PER ROW	ORDER LIST QTY	REMARKS
1	AA81736	Knocker	1		
	BA32659	Knocker	1		Includes AA81736 and A52391 flat seed disk with knock-out
	BA33567	Scraper	1		
2	H136447	Arm	1		
3	H136449	Pin fastener	1		
4	M61287	Compression spring	1		
5	A52389	Wheel	1		5 point

MaxEmerge5 Gauge Wheel Arms

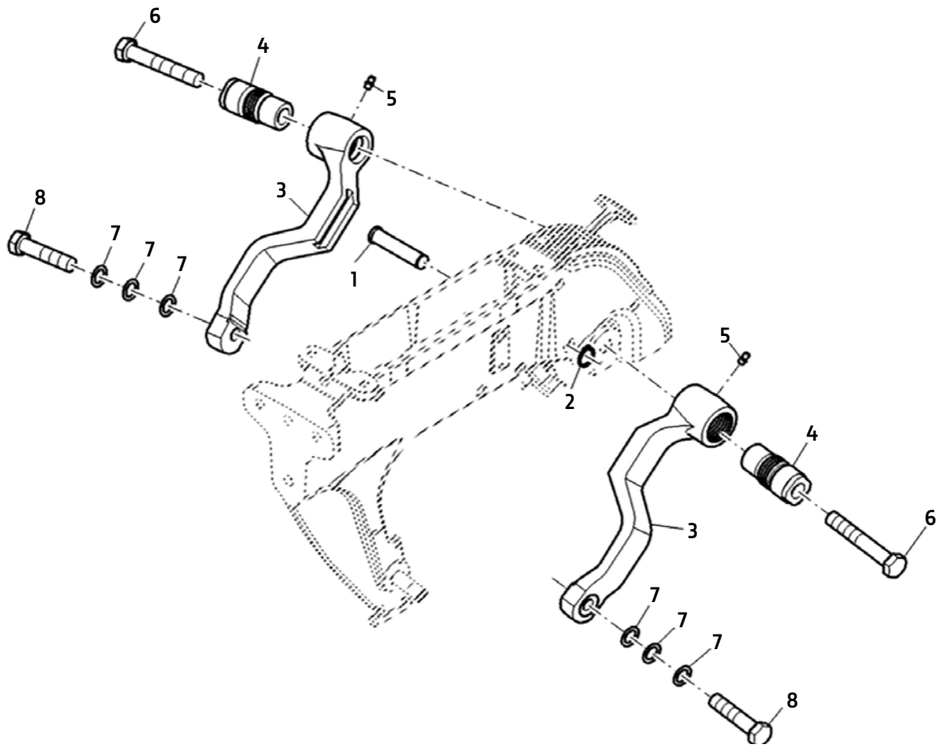

KEY	PART NO	PART DESCRIPTION	QTY USED PER ROW	ORDER LIST QTY	REMARKS
1	A89736	Groove pin	1		
2	N105572	Snap ring	1		
3	A92817	Arm	2		
4	A92818	Self-aligning bushing	2		
5	JD7844	Lubrication fitting	2		
6	19M8020	Cap screw	2		M16 x 100
7	N282054	Washer	6		
8	19M7719	Cap screw	2		M16 x 70

MaxEmerge5 Tru-Vee Opener

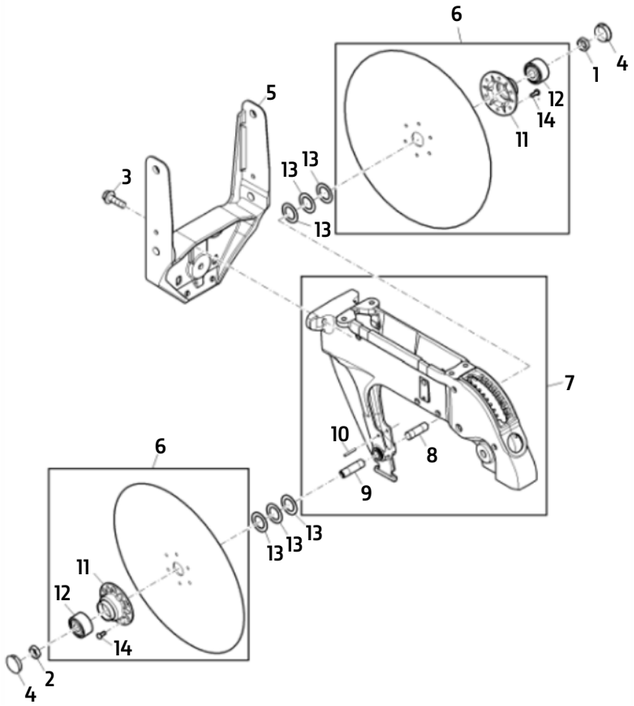

KEY	PART NO	PART DESCRIPTION	QTY USED PER ROW	ORDER LIST QTY	REMARKS
1	14M7260	Nut	1		M16 - RH
2	14M7382	Nut	1		M16 - LH
3	19M7791	Bolt	3		M12 x 40
4	A78218	Plug	2		
5	A93664	Shank	1		Shank head
6	AA65219	Disk	2		
7	AA79678	Shank	1		Tail assembly
8	A78210	Stud	1		RH
9	A79254	Stud	1		LH
10	34H284	Spring pin	1		3/16" x 1 - 1/4"
11	J16160	Shim	14		TK = 0.76 mm
12	AA59196	Ball bearing	1		

Maxemerge5 Tru-Vee Opener Shank

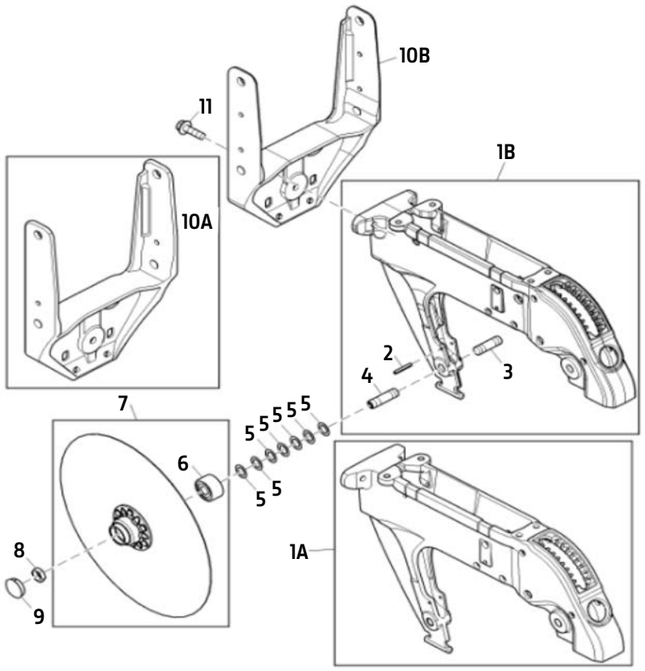

KEY	PART NO	PART DESCRIPTION	QTY USED PER ROW	ORDER LIST QTY	REMARKS
1A	AA79678	Shank	1		-790100
1B	AA96129	Shank	1		790101-
2	34H284	Spring pin	1		3/16" x 1 - 1/4"
3	A78210	Stud	1		
4	A79254	Stud	1		
5	J16160	Shim	14		TK = 0.76 mm
6	AA59196	Ball bearing	2		
7	AA65248	Disk	2		Includes A78218
8	14M7382	Nut	1		M16-RH
8	14M7382	Nut	1		M16-LH
9	A78218	Plug	2		
10A	A93664	Shank	1		-770100
10B	A107163	Shank	1		770101-
11	19M7791	Bolt	3		M12 x 40

General Fertiliser Opener

PART NO: BA28680

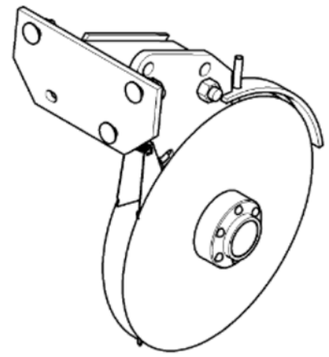

MaxEmerge5, XP, XP Pro Closing Wheel – Cast

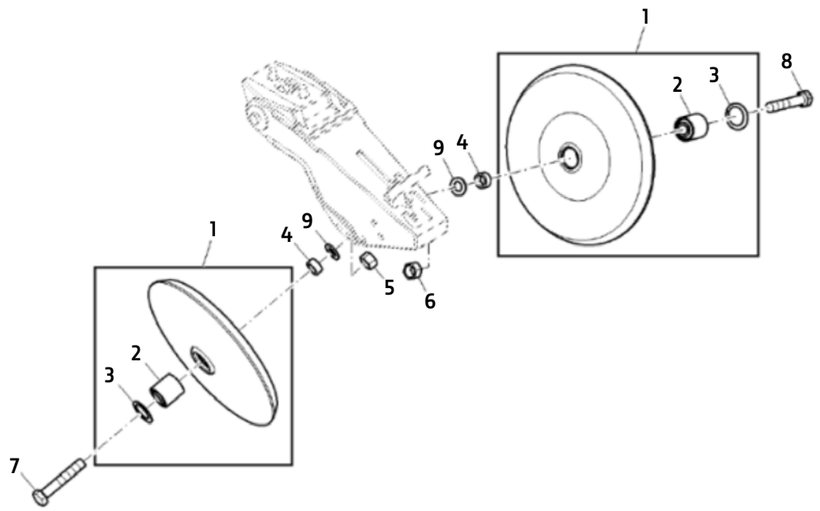

KEY	PART NO	PART DESCRIPTION	QTY USED PER ROW	ORDER LIST QTY	REMARKS
1	AA73763	Wheel	2		
2	AN212132	Ball bearing	2		
3	L1610N	Snap ring	2		
4	A52556	Spacer	2		
5	14M7276	Nut	1		M16
6	14M7543	Nut	1		M16-LH thread
7	19M7609	Cap screw	1		M16 x 90
8	19M9018	Cap screw	1		M16 x 90 LH thread
9	24M70553	Washer	2		17 x 30 x 3

MaxEmerge5, XP, XP Pro Closing Wheel – Rubber Tyre

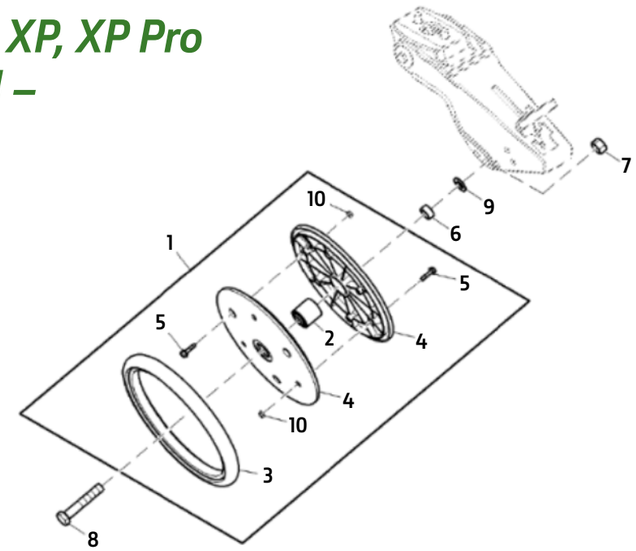

KEY	PART NO	PART DESCRIPTION	QTY USED PER ROW	ORDER LIST QTY	REMARKS
1	AA39968	Wheel	2		
2	AN212132	Ball bearing	2		
3	A22325	Tyre	2		
4	A56566	Wheel	4		
5	19M7863	Screw	12		M6 x 25
6	A52556	Spacer	4		
7	14M7276	Nut	2		M16
8	19M7501	Cap screw	2		M16 x 110
9	24M703	Washer	6		17 x 30 x 3 mm
10	H137327	Lock nut	12		M6
11	CJ18111	Washer	4		

MaxEmerge5 Seed Tube Guide

PART NO: A97107

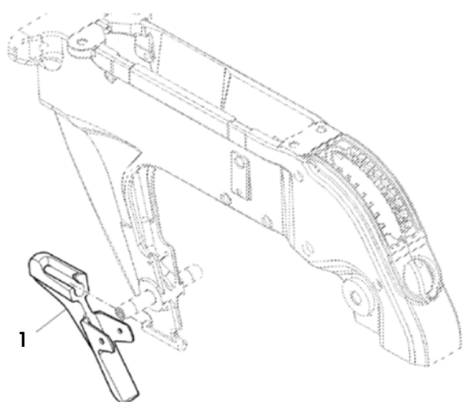

MaxEmerge5 Chain Sprocket – Chain Drive

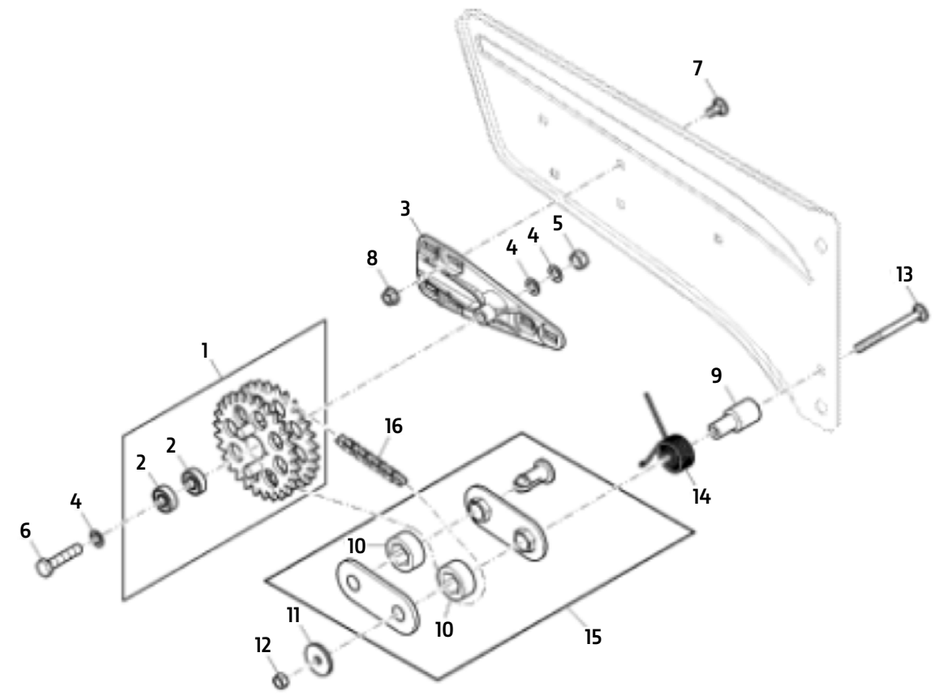

KEY	PART NO	PART DESCRIPTION	QTY USED PER ROW	ORDER LIST QTY	REMARKS
1	AA49877	Chain sprocket	1		Z = 28
2	AA34134	Ball bearing	2		
3	A55343	Flange	1		
4	R64525	Thrust washer	2		
5	14M7274	Nut	1		M10
6	19M7724	Cap screw	1		M10 x 45
7	03M7183	Bolt	3		M8 x 16
8	14M7298	Flange nut	3		M8
9	A62143	Bushing	1		
10	A62180	Bushing	2		
11	24H1296	Washer	1		11/32" x 1 - 3/8" x 0.134"
12	14M7273	Nut	1		M8
13	03M7295	Bolt	1		M8 x 90
14	A82137	Torsion spring	1		
15	AA46927	Idler	1		
16	AA61644	Roller chain	1		(Type ANSI 41) L = 111

MaxEmerge5, XP, XP Pro Gauge Wheel Narrow – Spoked

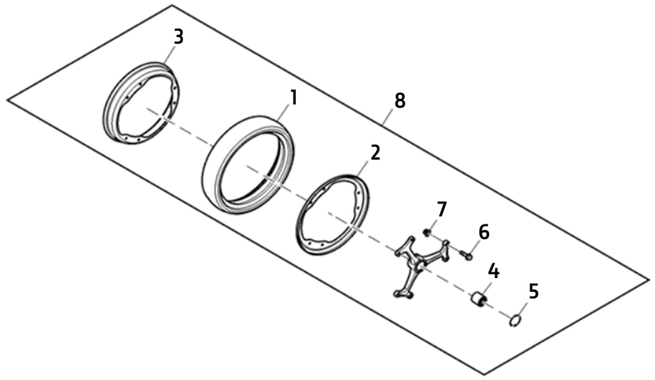

KEY	PART NO	PART DESCRIPTION	QTY USED PER ROW	ORDER LIST QTY	REMARKS
1	A85133	Tyre	1		3" x 16"
2	A102128	Rim	1		
3	A101571	Rim	1		Wheel half
4	AN212132	Ball bearing	1		
5	40M7304	Snap ring	1		
6	19M7868	Screw	6		M8 x 30
7	14M7396	Lock nut	6		M8
8	AA85465	Wheel	1		

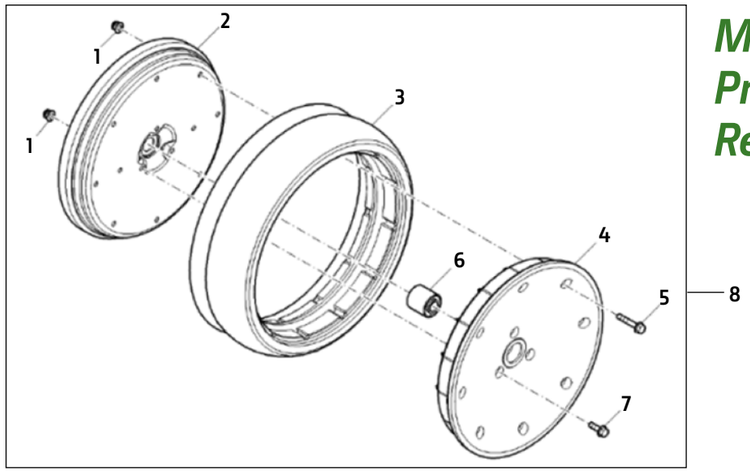

MaxEmerge5, XP, XP Pro Gauge Wheel – Regular

KEY	PART NO	PART DESCRIPTION	QTY USED PER ROW	ORDER LIST QTY	REMARKS
1	14M7396	Lock nut	22		M8
2	A77880	Wheel	2		
3	A84062	Tyre	2		
4	A56565	Wheel	2		
5	19M8318	Screw	16		M8 x 45
6	AN212132	Ball bearing	2		
7	19M7867	Screw	6		M8 x 25
8	AA66604	Wheel	2		

Seed Disk

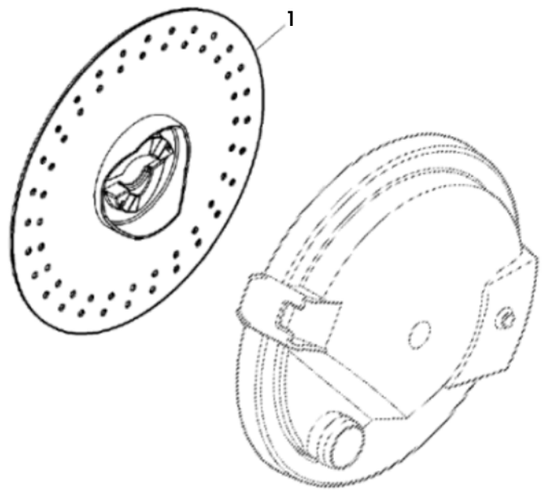

KEY	PART NO	PART DESCRIPTION	REMARKS
1	H136468	Seed plate for small bean	
	A51696	Seed plate for average bean	
	H136092	Seed plate for large bean	
	H138722	Seed plate for peanut	
	H136478	Seed plate for sunflower	
	A43215	Seed plate for small maize	
	A50617	Seed plate for standard maize	
	A52802	Seed plate for sorghum high distribution	
	A43066	Seed plate for sorghum	
	A56251	Seed plate for acid delinted cotton	
	A65622	Seed plate for cotton hilldrop	
	A42586	Seed plate for soya bean	
	A52391	Seed plate for large maize	
	A52554	Seed plate for special seed	
	A52390	Seed plate for small sweetcorn	
	H136445	Seed plate for sugarbeet	
	A102717	Seed plate for small seed	

JOHN DEERE PLANTER INSPECTION

CUSTOMER INFORMATION					PLANTER INFORMATION
Name:					Planter hectares:
Address:					Serial number:
City and province:					Warranty end date:
Phone:	Date:				
Section	**Condition**			**Customer OK's Repair**	**Replacement specification**
	OK	**Repair/ Replace**	**Adjust**		
FRAME AND WHEELS					
Safety chain					Is the chain present? Does the chain show excessive wear?
Parking stand					Check for cracked welds or missing pins.
Check tyre inflation					Verify tyre pressure meets specific tyre spec.
Check wheel bolt torque					Verify specific torque value for each model in the TM.
Inspect hitch strap bolt torque					Verify specific torque value for each model in the TM.
Check wheel bearings					Excessive play may indicate that the wheel bearing is worn and needs adjustment or replacement.
Check all safety decals, reflectors, and SMV sign					Are all decals, reflectors and SMV signs in place and visible?
Inspect all safety shields and warning lamps					Are all safety shields and warning lights in place and operational?
Check transport lock					Verify the transport lock is present.
Check all electrical harnesses					Check for stretched, cracked, broken, burnt wires and connectors. No worn harnesses or broken connectors, secure as required.
Check frame switches and sensors					Verify functionality of frame operation including fold switches, rockshaft switches, height switch, motion sensor. Replace/repair sensor(s) as needed. Re-route harnesses as needed.
Check all drive chain components: Sprockets, idlers, transmission, bearings					Check for worn/kinked links and sprockets, purging grease/looseness, loose worn/sprockets, and proper chain tension. Follow OM for lubrication guidelines.
Inspect condition of hydraulic hoses, routings and hose supports					No leaks, fittings tight, hoses worn. Replace/repair hose/fitting as needed. Re-route hoses as needed.
Inspect marker components					Check coulters, bearings, and cylinders. Ensure hardware is in place and no leaks are present. See TM for instructions on bearing replacement/adjustment.
Rockshaft cylinder					Check for visible leaks and hose abrasion.
Rockshaft					Inspect welds and hardware.
Check marker sequence valve					Ensure markers properly alternate.
ROW UNITS					
Parallel arm bushings					Inspect for excessive row unit looseness.
Parallel arm attaching cap screws					Check for proper torque (Grade 8.8 = 181 N-m or Grade 10.9 = 250 N-m).
Check all row unit hopper locks and disconnects					Adjust/replace to properly secure hoppers.
Inspect routing of row unit harness to seed sensor					Secure as required to minimise pinch points.

Section	Condition			Customer OK's Repair	Replacement specification
	OK	**Repair/ Replace**	**Adjust**		
Hopper and lid					Verified if installed and functioning correctly.
Seed tube					Inspect for wear against seed tube. Damage to the seed tube may decrease seed placement accuracy.
Check seed tube sensors					Perform monitor "Seed Tube Sensor Test" and verify sensor is functional through the display.
Seed tube guard					Inspect for wear. Replace when replacing opener blades or when the guard is no longer protecting the seed tube due to wear.
Double-disk opener shield					Ensure clearance between blade and shield.
Tru-Vee opener blade/bearing					Disk blades are sharp. Wear protective gloves and handle disks carefully to avoid being injured. Measure blade diameter using JDG11600 Opener Disk Wear Gauge or similar tool. Minimum specification is 14" diameter (356 mm). If diameter is below specification or if beveled edge is worn off, replace blades. **Check blade edge contact:** 1. Use two small business cards, or paper of similar thickness. 2. Slide business cards between blades until they are at each end of blade contact area. 3. Measure distance between the two business cards and ensure that blade edge contact is at specification.
Opener blade scraper					Check scraper blade and spring for wear.
Gauge wheel arm					Proper adjustment to opener blade.
Gauge wheel assembly					Check that gauge wheel tyres touch blades, but still turn with minimal resistance. Gauge wheel tyres must be a maximum 1.5 mm (0.06 in) away from blades at closest point.
Gauge wheel tyre					Replace if upper lip near blade is worn off.
Gauge wheel bearing/bushing					Inspect for proper bearing retention.
Closing wheel handle and bushing					Inspect for proper bearing retention and excessive looseness. Check for proper alignment with seed trench.
Inspect closing wheel/bearing/tyre					Check for excessive runout of loose bearing. Ensure tyre is secured by rim with no cracks. Inspect for rough turning or grease purging.
Inspect closing wheel spring					Check for broken springs, worn hooks on springs that may break in season, and stretched springs that don't have tension in all settings.
Depth adjusting handle assembly					Inspect wear at pivot and spring.
Row unit drive assembly					Inspect sprockets and bearing for no excessive wear or play.
VACUMETER					
Inspect vacuum fan					Inspect the impeller for any signs of damage – common damage from debris contact includes chips out of the impeller, blades, cracked impellers, etc. If any noticeable damage is found on the impeller, immediately replace the impeller. Additionally, inspect the impeller and the internal fan housing for signs of the impeller contacting the fan housing. See DTAC Solution 81960 for full details.
Check vacuum gauge filter					Check for dust and verify the gauge is responsive. Replace if needed.

Section	Condition			Customer OK's Repair	Replacement specification
	OK	Repair/ Replace	Adjust		
Inspect brush, brush holder, baffle and chute cover					If gaps are large enough to allow seed to pass through, replace brush.
Inspect hub seal					Check for weathered or cracked conditions. Replace as necessary.
Inspect seed disk					1. Check gap between disk and housing for possible seed leakage. If leaks are present, adjust meter hub. 2. Check for wear around perimeter of disk. Wear around perimeter of disk is acceptable up to an approximate depth of 1 mm (3/64 in). A small amount of wear around disk is acceptable, however seed must not be able to leak through between disk and housing. 3. Inspect seed cells for wear of sharp corners and residue. Replace seed disk if size of cell is significantly increased and/or residue is excessive. 4. Small grooves or scratches are acceptable on vacuum side of seed disk.
Inspect meter vacuum seal					Inspect for large cracks or wear. Replace when necessary or when replacing seed disks.
Inspect wiper					Replace if wiper is grooved or worn excessively.
Inspect latch/handle					Ensure proper retention of meter to hopper. Replace if cracked or broken.
Inspect chamber					Check for talc and treatment buildup.
Inspect vacuum meter dust seal					Check for cracks or weathered conditions. Replace as necessary.
Inspect flex drive assembly					Make sure flex drive pivots freely.
Inspect knocker assembly (option)					Replace if knocker points are worn.
Inspect bearing					Replace if rough or purging grease.
Inspect housing					Look for visible cracks.
Inspect vacuum hoses					Replace if cracked or worn.

FINGER PICK-UP

Inspect cover					Replace if cracked or worn.
Inspect belt					Replace if twisted or cracked paddles.
Inspect driver					Inspect that drive knobs are present.
Inspect housing					Check for any visible dents.
Inspect roller					
Inspect bushing					
Inspect bearing					Check for roughness or grease purging.
Inspect carrier plate with brush					Replace when case harden steel appears.
Inspect brush					Bristles are bent/missing.
Check finger assembly					Should be less than 0.15 mm gap between finger holder and carrier.
Inspect fingers and springs					Inspect for stretched/broken springs.
Inspect deflector housing					

RADIAL BEAN METER

Check bearing					Ensure properly seated in housing with no external play.
Inspect housing					Look for visible cracks.
Inspect bowl height					See TM for bearing replacement/adjustment.

Section	Condition			Customer OK's Repair	Replacement specification
	OK	Repair/ Replace	Adjust		
Check ring brush					Replace if excessively grooved or worn.
Check retaining brush					Wear of green retaining brush at cleanout 'bump' is normal and expected. Meter will operate properly with these fibres worn off. Replace if grooves are present.
Check brush					Check singling brush for wear. If brush thickness is less than 3 mm (1/8 in) or if upper tip of brush is below top of green retaining brush when assembled in meter, replace singling brush.
Check retainer					Clean retainer.
Check bowl					Inspect fingers on bowl for wear/damage. Replace as needed.
Check wing nut					Ensure tightness.
Check shim					
Check roller					Replace if fingers are worn off.
Check arm					Ensure proper spring force on roller.
Check ejector					
Check spring					Check for proper tension on roller.
Check cover					
Check spring locking pin					Inspect pin.
Check screw					
Check locks					
Inspect flex drive assembly					

FEED CUP METER ASSEMBLY

Check cover					Replace if worn/damaged.
Check seed plate					Replace if worn/damaged.
Check shim					Replace if worn/damaged.
Check bowl					Replace if worn/damaged.
Check shaft					Replace if worn/damaged.
Check housing					Replace if worn/damaged.
Check wing nut					Ensure tightness.
Check cover					Replace if worn/damaged.

ROW CLEANERS/COULTERS

Row cleaners					Verified if installed and functioning correctly. Replace bent teeth/inspect bearings. Replace if excessive wear, bearings are worn out, or not operating as desired.
Frame mounted coulters					Inspect bearings and blade wear. Adjust bottom of coulter approximately 10 mm (3/8 in) higher than bottom of opener blades.
Conservation disk coulters					Inspect bearings and blade wear. Adjust bottom of coulter approximately 10 mm (3/8 in) higher than bottom of opener blades.
Combination coulter					Inspect bearings and blade wear. Adjust bottom of coulter approximately 10 mm (3/8 in) higher than bottom of opener blades.
Unit mounted coulters					Inspect bearings and blade wear. Adjust bottom of coulter approximately 10 mm (3/8 in) higher than bottom of opener blades.

Section	Condition			Customer OK's Repair	Replacement specification
	OK	Repair/ Replace	Adjust		
DOWNFORCE					
Downforce system					Verified if installed and functioning correctly. More information available in DTAC Solution 91922 (active PDF) or 108211 (IRHD).
Heavy-duty adjustable springs					Check for worn cast components and excessive slop.
(IRHD) Hydraulic fittings and hoses					Check for leaks and hose wear. Reroute/replace hoses as needed.
(IRHD) Harnesses and sensors					Check connections, pinching, and any wear to harnesses.
(IRHD) Actuator and mounting					Check for wear and leaks.
(PDF) Check harnesses and sensors					Check connections, pinching, and any wear to harnesses.
(PDF) Pneumatic leaks					Check for leaks and confirm performance. Ensure no excessive compressor run time.
(PDF) Compressor					Verify function and compressor turns on/off at the correct times and builds appropriate pressure (150 psi to turn off).
ROW COMMAND					
Inspect routing of RowCommand clutch harness (if equipped)					Secure as required to minimise pinch points.
Perform RowCommand self-test (if equipped)					Verify system is functioning. Refer to OM.
FERTILISER/LIQUID/SOLUTION SYSTEM					
Central insecticide system					Verified if installed and functioning correctly.
Inspect CIS system hoses for damage (if equipped)					Wearing appropriate PPE, repair as required.
Inspect CIS system water filter (if equipped)					Wearing appropriate PPE, repair as required.
Inspect CIS system chemical filter (if equipped)					Wearing appropriate PPE, clean as required.
Prime CIS chemical system (if equipped)					Refer to DTAC Solution 83935.
Liquid fertiliser openers					Verified if installed and functioning correctly.
Liquid fertiliser tank					Verified if installed and functioning correctly.
Fertiliser Depth wheels and bearings					Inspect shear bolts, adjust bearings to TM.
Fertiliser opener/bearing/blade/scraper					Inspect for wear, excessive slop. Replace as needed. See TM for bearing replacement/ adjustment.
Inspect fertiliser hoses					Replace if kinked or cracked.
Check liquid/dry fertiliser transmission					Replace sprockets that are loose or worn.
Liquid herbicide system					Clean hoses and nozzles.
Liquid fertiliser system					Inspect hoses and pump for damage/kinks.
RECOMMENDATIONS					
Lubricate wheel bearings					
Lubricate entire machine					
Remove and lubricate meter drive assembly between coupler, washers, and outer bearing (non-Pro-Shaft drive)					

ORDER LIST

PART NUMBER	PART DESCRIPTION	QUANTITY

PART NUMBER	PART DESCRIPTION	QUANTITY

PART NUMBER	PART DESCRIPTION	QUANTITY

John Deere Dealer Stamp

This literature has been compiled for broad circulation in Sub-Saharan Africa. While general information, pictures and descriptions are provided, some illustrations and text may include finance, product options and accessories not available in all regions. Please contact your local dealer for details. John Deere reserves the right to change specifications and design of products described in this lirerature without notice. The green and yellow colour scheme, the leaping deer logo and the John Deere word mark are trademarks of Deere & Company.

www.deere.com/sub-saharan/en | africa@johndeere.com | Customer Care: 080 098 3821

Follow us on Facebook, Twitter and YouTube